广州安的电子技术有限公司

Saftty Electronic Technology Co., Limited

ST01H 系列热保护器技术规格书

Technical Specifications for ST01 H Series Thermal Protector

编 制 Draw up: 叶 东

审 核 Examine: 吴如洋

批 准 Approved: _____

发布日期 Issue Date：2025.07.17

ST01H 系列热保护器技术规格书

Technical Specifications for ST01 H Serise Thermal Protector

1 产品用途 Product app location

ST01H 系列热保护器具有体积小、无电流热效应、控温准确、感温灵敏、抗压强度高等特点，广泛适用于分马力电动机、变压器、线圈、电子产品、传感器的过热保护。因带 PTC 陶瓷发热元件而具有断电复位、延时保护功能，使其保护器功能更可靠、完全。

ST01 series thermal protector has the following features: initiative size, The thermal effect of current is s light, accurate temperature response, temperature sensitive, compact and pressure stable, etc. It is widely used in electric motors, pumps, transformers, coils, electronics and sensors for thermal overheat protect ion. Due to the PTC ceramic heating element, it has the function of power failure reset and delay protect ion, making the function of the protector more relable and safe.

2.外形和结构： Shape and structure

①动作温度范围 Operating Temp. Range from 60℃-180℃

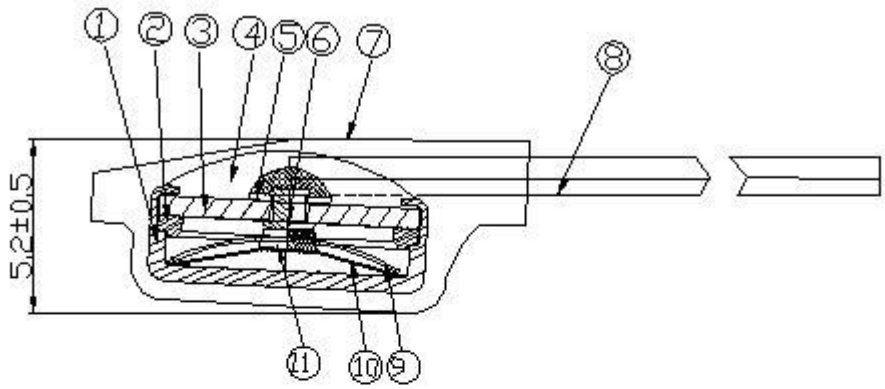

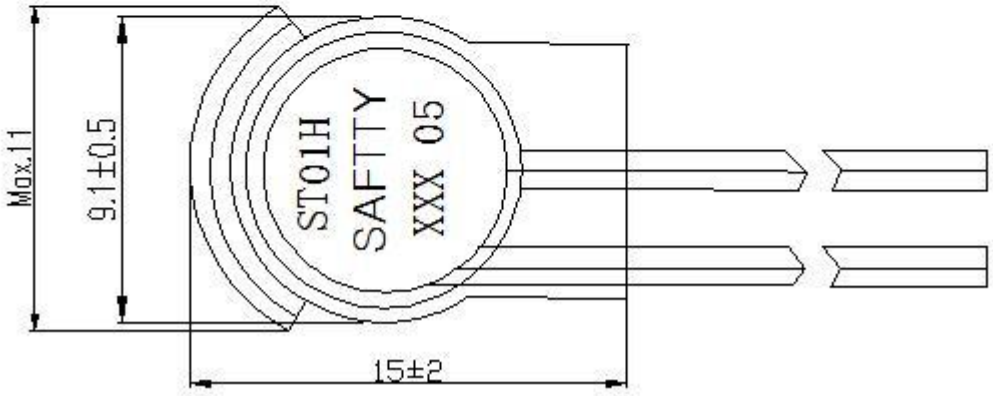

注：该厚度值 5.2 为使用 UL10362 AWG22 直径为 1.35mm 的导线的产品；如需要特定线材， 产品的厚度测量值会改变。

Note: This thickness value 5.2 is a product using UL10362 AWG22 wire with a diameterof 1.35 mm; if a specific wire is required, the thickness measurement value of the product will change.

序号 No.	零件名称 Part name	序号 No.	零件名称 Part name	序号 No.	零件名称 Part name
1	外壳 Case	5	垫片 shim	9	双金属片 Bimetal-disc
2	环 Ring	6	静触点 Stationary contact	10	簧片 Spring
3	PTC 盖板 PTC Cover plate	7	绝缘套管 Insulation shrink cap	11	动触点 Movable contact
4	环氧树脂 Epoxy resin	8	引线 Lead wire		

工作原理 Working principle:

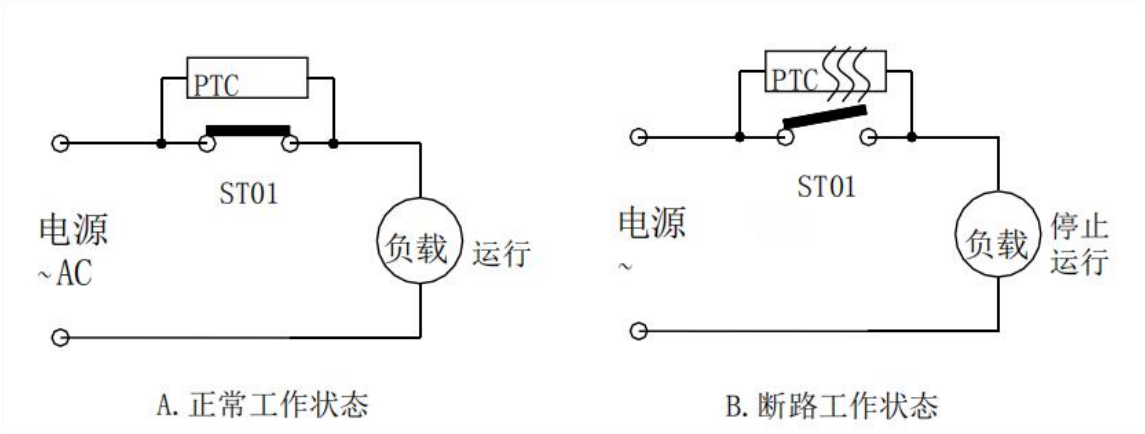

ST01H 手动复位型热保护器在原热保护器基础集成了 PTC 陶瓷发热元件，该发热元件与保护 器触点形成并联电路，负载正常运行时，PTC 不会产生高温（如图 A）。当负载异常时产生的 高温或大电流会使保护器断路，此时 PTC 元件会产生高温及高阻值，PTC 产生的高温会使热 保护器一直保持于断路状态，负载维持停止运行状态（如图 B）。 当主机切断电源后，PTC 发热元件停止发热，保护器经过一定时间的降温后可自动复位，再次接通电源，负载运行。

The ST01H manual reset thermal protector integrates a PTC ceramic heating element on the base of the primary thermal protector, which forms a parallel circuit with the protector contacts, and the PTC does not generate high temperatures during normal load operation (Figure A). When the load is abnormal, the high temperature or large current generated will make the

protector disconnect, at this time the PTC element will produce high temperature and high resistance, and the high temperature generated by PTC will keep the thermal protector in an open circuit state, and the load will maintain a stopped operating state (Figure B). When the host disconnects the power supply, the PTC heating element stops heating, and the protector can automatically reset after a certain period of cooling, turn on the power again, and the load runs.

3.性能 （性能数据均为内部实验室测试，供客户参考。客户应根据自己的标准确认是否适用。我们保留在进一步发展过程中做出改变的权利。）

Capabilities(The performance data are all internal laboratory tests for customer reference. Customers should confirm whether it is applicable based on their own standards.We reserve the right to make changes during further development.)

3.1 电气参数

额定交流电压 Rated AC voltage：250V；

额定直流电压 Rated DC voltage：24V；

最大承受电压 Maximum withstand voltage：AC500V DC28V；

额定电流 Rated current (COSΦ=1.0):2.5A;

额定电流 Rated current (COSΦ=0.6):1.6A;

3.2 动作特性： Performance

3.2.1 额定断开温度 60℃～180℃（详见附表）。

Rated open temperature: 60℃~180℃(details as per attached list)

3.2.2 复位温度（详见附表）。

Reset temperature: (details as per attached list)

3.3 电气强度 Electric strength:

测试仪器为耐压测试仪 the test instrument is high voltage tester.

a.产品在断开时的引线之间应能承受 AC500V，历时 1min 而无击穿闪络现象；

When the product is in the breaking state, the lead wires should be able to withstand AC500V lasting for 1min without breakdown or flash-over;

b.产品引线与绝缘外壳之间能承受 AC2000V，历时 1min 而无击穿闪络现象。

The part between the lead wires and the case should be able to withstand AC2000V lasting for 1min without breakdown or flash-over;

3.4 绝缘电阻 Insulation resistance:

在正常条件下，引线与绝缘外壳之间的绝缘电阻在100MΩ以上。（所用表计为DC500V 兆欧表） Under normal conditions, the insulation resistance between leads (terminal) and case should be more than 100MΩ measured by ohmmeter of DC500V.

3.5 接触电阻 Contact resistance

标准引线长度 55mm 产品的接触电阻应不大于 50mΩ。

The contact resistance of standard lead wire length 55mm products should be lower than 50mΩ.

3.6 抗拉力试验 Tensile resistance test

产品的引线端应能承受大于或等于 30N 静拉力并保持 1 分钟，导线不断裂或松动。

Terminal & leads should endure more than 30N axes direction pull lasting for 1 minute without break or looseness.

3.7 耐高温试验 High temperature test

产品置于高于额定动作温度 30℃的空气环境中保持 16h，取出放置 2 小时后，检测其温度变化不超过初始值的±5℃或±5%，取最大值。

Keep the thermal protector in an incubator which temp. is 30℃ higher than its rated switching temperature for sixteen hours, and test it two hours later after taking out from the incubator, while the temperature change does not exceed the initial value of ± 5 ℃ or ± 5%, returns the maximum value.

3.8 耐低温试验 Low temperature resistance test

产品置于-40℃空气环境中保持 2h，取出放置 2 小时后，检测其温度变化不超过初始值的±5℃或±5%，取最大值。

Keep the thermal protector in a -40℃ incubator for two hours, and test it two hours later after taking out from the incubator, while the temperature change does not exceed the initial value of ± 5 ℃ or ± 5%, returns the maximum value.

3.9 抗振试验 Anti-Vibration test:

热保护器应能承受振幅 1.5mm，频率变化 10～55Hz，扫描变化周期 3～5 次/min，振动方向 X、Y、Z，每个方向各连续振动 2h，检测其温度变化不超过初始值的±5℃或±5%，取最大值。Thermal protector should be able to withstand the amplitude 1.5mm, frequency 10- 55Hz, scanning change cycles of 3-5 times /min. The vibration direction X, Y, Z and each direction vibrates on a continuous basis for 2 hours while the temperature change does not exceed the initial value of ±5℃

or ±5%, returns the maximum value.

3.10 极限短路试验 Short-circuit limit test

产品在串接 RL1-15A 熔断器的电路中承受 200A 的极限短路电流时，应不引起包裹在保护器上的棉花燃烧。

When the thermal protector is in series connection with RL1-15A fuse to withstand short circuit current limit of 200A, it should not cause the cotton burned which is wrapped on the thermal protector.

4 产品断开弹跳时间 Product disconnection bounce time

Bounce Time<1ms.

5 其他事项：Others

5.1 断开温度检测的升温速率应控制为 1℃/1min，用指示灯显示通断状态，允许通过产品的电流不超过 0.01A。

For action temperature testing, temperature rising rate should be controlled at 1℃/min and use indicator light to show the on/off state. The testing current should be no more than 0.01A.

5.2 使用过程中产品不能承受强烈冲击力及压迫力；最大承受压力为 300N.

In your production, the thermal protectors could not withstand a big impact and stress.The maximum bearing pressure is 300N.

5.3 型号规格说明： Model Code System explanation

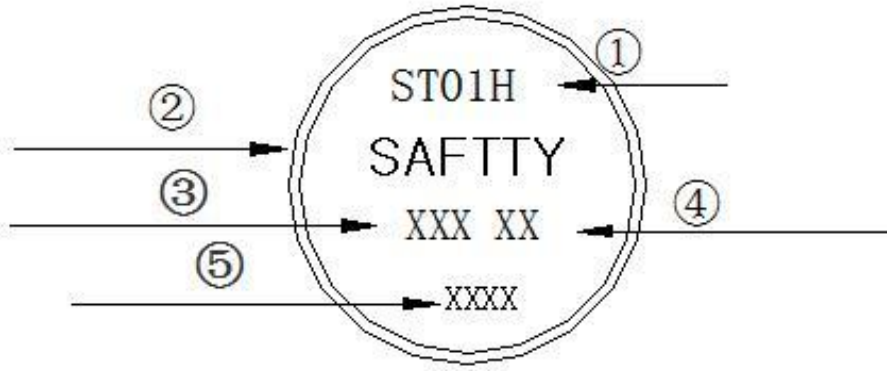

产品内部外壳打标 The mark of internal metal case

① ST01H--一产品型号 Model No.

如果产品型号在第一行，字体颜色为黑色，则表示产品为常闭产品。如果产品型号在第三行，字体颜色为红色，则表示产品为常开产品。If the product model is in the first line and the font color is black, it indicates a normally closed product. If the

product model is in the third line and the font color is red, it indicates a normally open product.

② SAFTTY--安的公司标志 SAFTTY logo

③ XXX--产品动作温度（060-180），表示该产品在标识温度情况下动作（单位：℃）

Product operating temperature (060-180), indicating that the product is operating at the identified temperature (unit: ℃)

④ XX-一产品动作温度精度，05 --->±5℃ 10 --->±10℃。

Product operating temperature tolerance, 05 --->±5℃; 10 --->±10℃.

⑤ XXXX--生产批次号，用来产品追溯。批次生成规则如下：

Production batch number for product traceability. The batch generation rules are as follows:

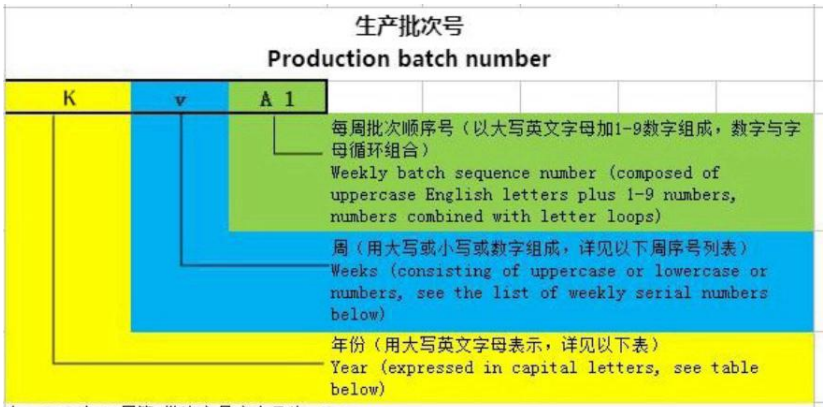

如：2024年48周第1批次产品应表示为：KvA1
For example, the first batch of products in the 48th week of 2018 should be expressed as: EvA1

1. 年序号表如下 The chronological table is as follows:

年份 YEAR	2024	2025	2026	2027	2028	2029	2030
标记 MARK	K	L	M	N	O	P	Q

2. 周序号表如下 The weekly sequence number table is as follows:

周 WEEK	1(27)	2(28)	3(29)	4(30)	5(31)	6(32)	7(33)
标记MARK	A(a)	B(b)	C(c)	D(d)	E(e)	F(f)	G(g)
周 WEEK	8(34)	9(35)	10(36)	11(37)	12(38)	13(39)	14(40)
标记MARK	H(h)	I(i)	J(j)	K(k)	L(l)	M(m)	N(n)
周 WEEK	15(41)	16(42)	17(43)	18(44)	19(45)	20(46)	21(47)
标记MARK	O(o)	P(p)	Q(q)	R(r)	S(s)	T(t)	U(u)
周 WEEK	22(48)	23(49)	24(50)	25(51)	26(52)	53	
标记MARK	V(v)	W(w)	X(x)	Y(y)	Z(z)	9	

注：标准品引线为 UL3398/ UL10362,AWG22，白色/黄色，引线长 55/55mm，半剥 6mm。

Standard lead wire is UL3398 or UL10362, AWG22, White or Yellow, 55mm and semi-stripped 6mm.

5.4 包装、储存、运输 Packing, storage and transportation

① 产品包装采用透明塑料自封袋，每个小包装袋含 100pcs，每个大包装包含 10 小包， 发货均采用纸箱包装，尺寸为 32*26*25CM；如果总数量偏少，我司会采用其他规格纸箱。

Product packaging using transparent plastic self-sealing bags, each small

packaging bag contains 100pcs, each large package contains 10 small packets, the delivery is packed in cartons, the size is 32 * 26 * 25CM; if the total quantity is small, our company will use other specifications of cartons.

② 储存时放于湿度 40%～80%、温度-5～40℃环境中 12 个月无变化；

The product should be stored at the -5~40℃ environment with the relative humidity of 40%～80% for 12 months without changes.

③ 直接运输或托运，应轻拿轻放，避免碰撞或受潮。

Direct transportation or shipment, it should be handled carefully and avoid collision or damp.

④ 如有防真空浸漆要求，请在报价前向我司销售人员说明具体要求。

If you products need to suitable for vacuum impregnation process, please explain the specific requirements to our sales before quoting.

附表1：Attached list 1

序号 No.	动作温度℃ Open temp.	复位温度℃ Reset temp.	序号 No.	动作温度℃ Open temp.	复位温度℃ Reset temp.
1	60±5	35-53	14	125±5	95±15
2	65±5	36-57	15	130±5	100±15
3	70±5	36-57	16	135±5	105±15
4	75±5	38-63	17	140±5	110±15
5	80±5	53±15	18	145±5	115±15
6	85±5	57±15	19	150±5	120±15
7	90±5	60±15	20	155±5	125±15
8	95±5	65±15	21	160±5	130±15
9	100±5	70±15	22	165±5	135±15
10	105±5	75±15	23	170±5	140±15
11	110±5	80±15	24	175±5	145±15
12	115±5	85±15	25	180±5	150±15
13	120±5	90±15			